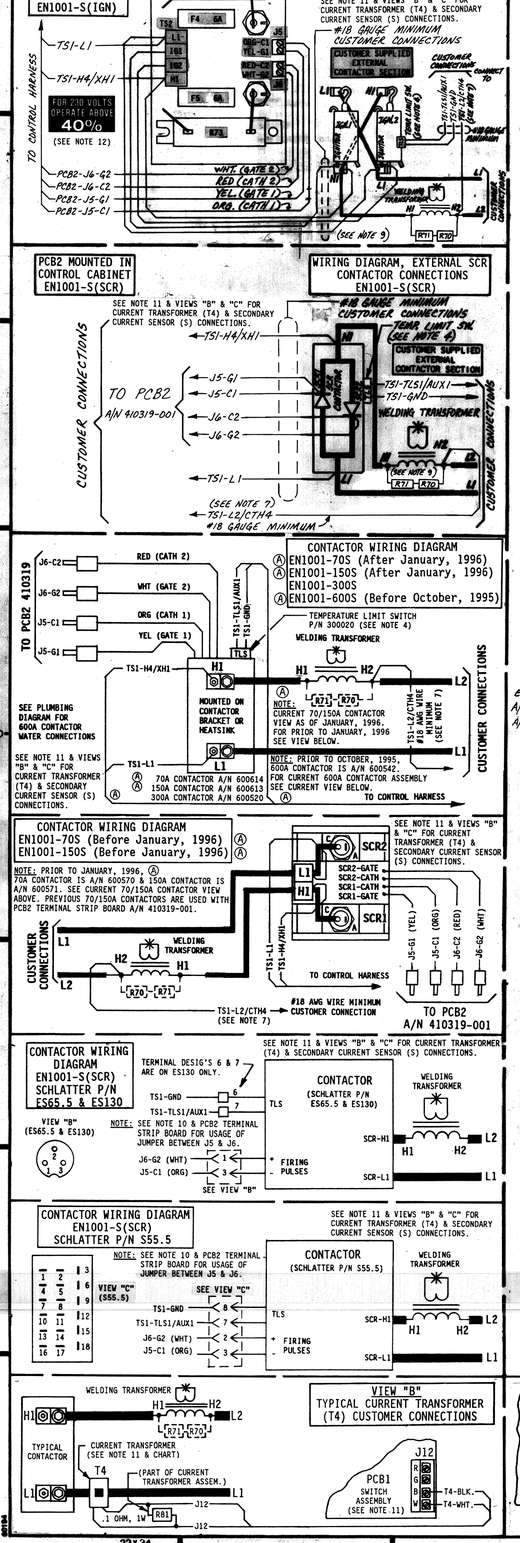

NOTES:

1. It is recommended that control wiring (i.e.: initiation, pressure switch, etc.) be physically separated from the high voltage wiring (115 volts or higher).
2. For 460 VAC Operation - Use Jumper #1 on T3 & TS1. As shipped unless otherwise specified. For 230 VAC Operation - Use Jumper #2 on T3 & TS1. For 575 VAC Operation - FACTORY WIRED ONLY. SEE VIEW "A". Replace T3 with P/N 311016. Wire per View "A". Use Jumper #1 between H2 & H3 on TS1. Use Resistor R74 (2000 Ohm, 10 Watt) in place of Jumper #1 between CTH2 & CTH3 on TS1. For 115 VAC or 380 VAC Operation - CONSULT FACTORY.
3. For Single Stage Pilot Operation - Connect pilot switch to TS1-FS3 & TS1-GND. No jumpers required across TS1-FS1 & TS1-GND.

   For Two Stage Pilot Operation - Connect 1st stage pilot switch to TS1-FS1 & TS1-GND. Connect 2nd stage pilot switch to TS1-FS3 & TS1-GND.

   For DUAL COUNT/DUAL CURRENT (Dual Weld/Dual Heat) or TRIPLE COUNT/TRIPLE CURRENT (Triple Weld/Triple Heat) or External Schedule Selection, SEE MANUAL.
4. (A) EN1001-S(IGN) & EN1001-S(SCR):
   When used, connect customer provided Normally Closed (N.C.) Temperature Limit Switch (TLS) across TS1-TLS1/AUX1 & TS1-GND and remove jumper between TS1-TLS1/AUX1 & TS1-GND.
   EN1001-70S, EN1001-150S, EN1001-300S, & EN1001-600S:
   ENTRON supplies Temperature Limit Switch (TLS) P/N 300020 and provides connections to TS1-TLS1/AUX1 & TS1-GND. Jumper not required between TS1-TLS1/AUX1 & TS1-GND.
   NOTE: TLS Thyristor will open at temperatures greater than or equal to 150° F.
5. When external valve power is supplied to the control. Remove and insulate leads TS3-VL1 & TS3-VL2 on the Terminal Strip Board (PCB2), (from T3-X1 & T3-X2). Connect external AC power supply (24-240 VAC) to TS1-VL1 & TS1-SV2/SV4/VL2.
   CAUTION: Do not overtighten TS3.
6. VALVE 3 OUTPUT USAGE:
   TS1-SV5 & TS1-SV6 (Valve 3) can be used for either a Valve output or a Process output.
   When TS1-SV5 & TS1-SV6 is used as a Valve output use Jumper "A" on TS3.
   When TS1-SV5 & TS1-SV6 is used as a Process output use Jumper "B" on TS3.
   CAUTION: Do not overtighten TS3

   WARNING: Use of Jumper "B" bypasses control relay contacts to allow a process output without an initiation. SEE MANUAL.
7. Connect TS1-L2/CTH4 to L2/H2 side of Welding Transformer Primary.
8. When Optional Program Lockout is specified by customer. Dial Plate A/N 600574-009 replaces A/N 600574-008. Add Switch P/N 600531-001 & remove Hole Plug P/N 565003.
9. EN1001-S(IGN) & EN1001-S(SCR):
   Remove all connections from previously existing firing circuits to L1, L2/H2, & H1 also Ignitor leads or SCR Gate leads & SCR Cathode leads. All previously existing surge Resistors or Rectifiers must be disconnected prior to installation of this control.
   CAUTION: On EN1001-S(SCR), Do not overtighten J5 & J6.
10. For External SCR Contactor Firing with SCHLATTER P/N S55.5, ES65.5, & ES130 Contactors. Do NOT make J5 & J6 connections as shown on PCB2. See EN1001-S(SCR) Contactor Wiring Diagram with SCHLATTER Contactors. Install jumper on PCB2 Terminal Strip Board between J5-2 (Yellow) & J6-1 (Red). Make connections from J5-1 (Orange) & J6-2 (White) on PCB2 to SCHLATTER Contactor per correct External SCR Contactor Wiring Diagram.
11. CURRENT TRANSFORMER (T4) CONNECTIONS:
    Wire per view "B". Current Transformer coil (T4) shown installed on L1, may be installed on H1. Wires from Current Transformer (T4) to J12 should be kept as short as possible.
    SECONDARY CURRENT SENSOR (S) CONNECTIONS:
    Wire per view "C". Secondary Current Sensor (S) may be used in place of Current Transformer (T4). Add J12-J12 Harness A/N 322379 & modify cabinet per drawing P/N 510015-006.
12. CAUTION: Do NOT set Current Control below 40% for 230 Volt Operation with Ignitron Tube Contactor.

CURRENT SENSING COIL/SENSOR APPLICATION CHART							
COIL/SENSOR MODEL NUMBER	CURRENT TRANSFORMER OR SECONDARY CURRENT SENSOR PART NUMBER	CONTACTOR SIZE				EXTERNAL FIRING	
		70A CONT.	150A CONT.	300A CONT.	600A CONT.	IGN	SCR
P2 - 200:5	A/N 600575 OBSOLETE	X	X			X	X
P2 - 200:5	A/N 600575-001 OBSOLETE					X	X
P2 - 200:5	A/N 600575-002	X	X				
P2 - 200:5	A/N 600575-003					X	X
P5 - 500:5	A/N 600576 OBSOLETE			X	X		
P5 - 500:5	A/N 600576-001 OBSOLETE					X	X
P5 - 500:5	A/N 600576-002			X	X		
P5 - 500:5	A/N 600576-003					X	X
P10 - 1000:5	A/N 600577-001 OBSOLETE					X	X
P10 - 1000:5	A/N 600577-003					X	X
S	A/N 600590 & A/N 322379	X	X	X	X	X	X

X = ONE CURRENT TRANSFORMER ASSEMBLY or ONE SECONDARY CURRENT SENSOR ASSEMBLY.

PARTS LIST - CONTROL SECTION					421270-002 A
EXT SCR CONT'S	EXT IGN & 70/150A CONT'S	300A & 600A CONT'S	DESIG.	PART NO.	DESCRIPTION
QTY.	QTY.	QTY.			
1	1	1		600574-008	Assem., Dial Plate, EN1001, Consisting of:
@	@	@		600574-009	Assem., Dial Plate, w/Keylock, EN1001, Consisting of:
1	1	1	PCB1	600572-004	Assem., Switch, Sequence Control & Display Bd.
@	@	@	SW1	600531-001	Assem., Switch, Keylock, Momentary, SPST
1	1	1		540245	Illustrated Panel, Dial Plate, EN1001
1	1	1		515104	Panel, Display Window, Red Filter, EN1001
1	1	1		565003	Hole Plug, 3/4" Diam., Black
1	1	1	PWR.LT.	305001	Lamp, Neon, Red, 230V
1	1	1	WLD.LT.	305002	Lamp, Neon, Clear, 230V
1	1	1	J4-J4	322027	Assem., Harness, Control Bd. to RS232 Driver Bd.
1	1	1	J2-J2	322303	Assem., Harness, Control Bd. to Terminal Bd.
		1	J3	322304	Assem., Harness, Power, 70/150A & 300/600A Cont's
	1		J3	322304-002	Assem., Harness, Power, External IGN Tube Cont's
1			J3	322304-003	Assem., Harness, Power, External SCR Contactors

PARTS LIST - CONTACTOR SECTION							
EN1001-600S	EN1001-300S	EN1001-150S	EN1001-70S	EN1001-S(SCR)	EN1001-S(IGN)		
QUANTITY						DESIG.	PART NO.	DESCRIPTION
1	1	1	1	1	1	TS1	335034	Terminal Strip, 10 Pin, (Part of J3 Harness)
1	1	1	1	1	1	J232-J232	322369-002	Assem., Harness, RS232 Driver Bd. to Rear Panel
				1	1	(J5-J5/J6-J6)	322311	Assem., Harness, IGN Firing Module to Term. Bd.
1	1	1	1	1	1	T1	310001	Transformer, Control, (Part of J3 Harness)
1	1	1	1	1	1	T2	310002	Transformer, Sense, (Part of J3 Harness)
1	1	1	1	1	1	T3	311001	Transformer, Valve, 50VA
*	*	*	*	*	*	T3	311016	Transformer, Valve, 50VA, 575V
SEE CHART						T4	SEE CHART	Assem., Transformer, Current, 200:5, P2
SEE CHART						T4	SEE CHART	Assem., Transformer, Current, 500:5, P5
SEE CHART						T4	SEE CHART	Assem., Transformer, Current, 1000:5, P10
2	2	2	2	2	2	R70,71	225016	Resistor, Power, Surge, 500 Ohm, 100W
				2	2	R72,73(PCB3)	220505	Resistor, Ignitor, 5 Ohm, 50W, (Part of 410318)
*	*	*	*	*	*	R74	600048	Assem., Resistor, Power,2000 Ohm,10W,(For 575V)
1	1	1	1	1	1	R81	210198	Resistor,Metal Oxide,.1 Ohm,1W,(Part of Curr Xfmr)
1	1	1	1	1	1	F1	308006	Fuseholder, 2 Pole, Mini, 600V, For Dual BAF 6
1	1	1	1	1	1	F1	307018	Fuse, Control, 6/10A, BBS 6/10
3	3		3	3	3	F6,7,8(PCB2)	307022	Fuse, 1 Amp, Slow Blow, ZAG, (Part of 410319 & 410319-001)
				2	2	F4,5(PCB3)	307010	Fuse, Ignitor, 6 Amp, BAF 6, (Part of 410318)
1	1	1	1	1	1	(R70,71)	325191	Assem., Wire, Surge Resistor, 18 GA., Black
2	2	2	2	2	2	(T3)	325149	Assem., Wire, Valve Transformer, 22 GA., Blk.
SEE CHART							600590	Assem., Secondary Current Sensor (S)
SEE CHART						J12-J12	322379	Assem., Harness, Secondary Current Sensor
(A)	1		1				600614	Assem.,Contactor,Thyristor,Air,70A,460/575V,w/TLS
(A)		1		1			600613	Assem.,Contactor,Thyristor,Air,150A,460/575V,w/TLS
					1		600520	Assem., Cont.,Thyristor,Air,300A, 460/575V, w/TLS
(A)	1						600609	Assem., Cont.,Thyristor,Water,600A, 460/575V
(A)	1	1	1	1		TLS	300020	Switch, Temp. Limit,(Part of 600520/600613/600614)
(A)	2						346004	Lug, 5/16 Bolt to 2/0 Wire, 600A Contactor,L1 & H1
(A)	1						530021	Plate, Mounting, 600A Thyristor Contactor
(A)	1	1	1	1		PCB2	410319	Assem., PCB, Terminal Strip Board, EN1001
					1	PCB2	410319-001	Assem., PCB, Term. Strip Bd., Ext. Firing, EN1001
					1	PCB3	410318	Assem., PCB, IGN Firing Module
1	1	1	1	1	1	(PCB2)	510236	Plate, Mounting, Terminal Strip Board
1	1	1	1	1	1	PCB5	410326	Assem., PCB, RS232 Driver Board
1	1	1	1	1	1		346004	Lug, Screw, Chassis GND, 2/0 Wire
1	1	1	1	1	1	IDS	600044	Assem., Interlocking Door Solenoid
							314001	Coil Assem Only, IDS
1	1	1	1	1	1		510015-007	Cabinet, "S" Subcompact, Modified
1	1	1	1	1	1		510017	Door, Cabinet, "S"
1	1	1	1	1	1		700140	APPLICATION NOTE, RS232 OPTION
1	1	1	1	1	1		700120	Manual, EN1001
1	1	1	1	1	1		421271	Logic Diagram, EN1001 Control
1	1	1	1	1	1		421270-002	Wiring Diagram, EN1001-Series/232, "S" Cabinet

@ Optional Keylock when specified by customer. See Note 8. Pack key in Poly bag 900148 & attach to Door w/Yellow Tape 900118.

* Substitution or Addition of Parts when 575V Control is specified.

MANUFACTURING INSTRUCTIONS

See Drawings #600530, #600530-001, #600530-002, & #600530-003 for Mechanical Assembly Instructions.
See Drawing #440269 for Packing Instructions, "S" Cabinet.
See Drawing #440352 for Label Locations, "S" Cabinet.
See Drawing #440055 for Customer Mounting & Knockout Detail of "S" Cabinet.
For Layout/Assembly of Front Panel, See Drawing #600526.
See Drawing #440457 for Current Transformer Assembly.
See Drawing #440458 for Secondary Current Sensor Assembly.

REV	AUTH	DESCRIPTION	DRWN BY DATE	CHK BY DATE
—	—	ORIGINAL RELEASE		
A		IN CTRL SECTION OF P/L:70/150A XTOR J3 HARNESS 302304 WAS 322304;001; IN 70A XTOR COLUMN IN P/L:70A XTOR 600614 WAS 600570,PCB2 410319 WAS 410319-001; ADDED TS 300020 TO 150A XTOR W/D;ADDED 150A XTOR 600613 WAS 600571;ADDED 300A XTOR 600520 WAS 600572;ADDED 300020;IN 600L:UPDATED NOTE 4"TLS CONNECTIONS..." & FOR 70/150A XTORS PCB2 410319 WAS 410319-001;IN 70/150A XTOR W/D:LABELED 70/150A XTORS "BEFORE JAN .1996" & ADDED REF NOTE "PRIOR TO JAN.1996..."; IN 300/600A XTOR (BEFORE OCT.1995) W/D:ADDED 70/150A XTORS "BEFORE OCT.1995";ADD 150A XTOR P/N 600614"; 150A XTOR REF "P/N 600613";REF NOTE "CURRENT 70/150A XTOR..."	DEC 2-28 96	DEC 2-28 96
A		FOR 600A XTOR CONN IN P/L:600A XTOR 600569 & LUGS(2)346004 REPLACED 600542;ADDED PLATE 530021 & BNT'D DESC "P/O 600542" FROM TLS 300020;IN ORNG: ADDED 600A XTOR W/D (AFTER OCT.1995);IN 300/600A XTOR W/D:LABELED 300A XTOR "BEFORE OCT.1995";ADDED NOTE "CURRENT 300A XTOR..." & BNT'D 600A XTOR REF "P/N 600542";		
ECN 2367		IN CTRL SECTION OF P/L:70/150A XTOR J3 HARNESS 302304 WAS 322304;001;	DEC 2-28 96	DEC 2-28 96
ECN 2358		IN 70A XTOR COLUMN IN P/L:70A XTOR 600614 WAS 600570,PCB2 410319 WAS 410319-001; ADDED TS 300020 TO 150A XTOR W/D;ADDED 150A XTOR 600613 WAS 600571;ADDED 300A XTOR 600520 WAS 600572;ADDED 300020;IN 600L:UPDATED NOTE 4"TLS CONNECTIONS..." & FOR 70/150A XTORS PCB2 410319 WAS 410319-001;IN 70/150A XTOR W/D:LABELED 70/150A XTORS "BEFORE JAN .1996" & ADDED REF NOTE "PRIOR TO JAN.1996..."; IN 300/600A XTOR (BEFORE OCT.1995) W/D:ADDED 70/150A XTORS "BEFORE OCT.1995";ADD 150A XTOR P/N 600614"; 150A XTOR REF "P/N 600613";REF NOTE "CURRENT 70/150A XTOR..."		
ECN 2336		FOR 600A XTOR CONN IN P/L:600A XTOR 600569 & LUGS(2)346004 REPLACED 600542;ADDED PLATE 530021 & BNT'D DESC "P/O 600542" FROM TLS 300020;IN ORNG: ADDED 600A XTOR W/D (AFTER OCT.1995);IN 300/600A XTOR W/D:LABELED 300A XTOR "BEFORE OCT.1995";ADDED NOTE "CURRENT 300A XTOR..." & BNT'D 600A XTOR REF "P/N 600542";		

ENTRON CONTROLS INC

SCALE	DATE	DRAWN BY	CHK'D BY	APPROVED BY
N	8-14-95	DEC	DEC 8-14-95	

TOLERANCE UNLESS SPECIFIED
ANGLES: ± 5°
DECIMALS: ± .010
FRACTIONS: ± 1/64

REVISED
REV LTR: A
DATE: 2-28-96 DEC

WIRING DIAGRAM, EN1001-SERIES/232, "S" CABINET

EN1001-S(IGN)/232 EN1001-70S/232 EN1001-300S/232
EN1001-S(SCR)/232 EN1001-150S/232 EN1001-600S/232

NEXT ASSM/USED ON

DRAWING NUMBER 421270-002 REV A

421270-002 A

22×34 ENTRON 470046