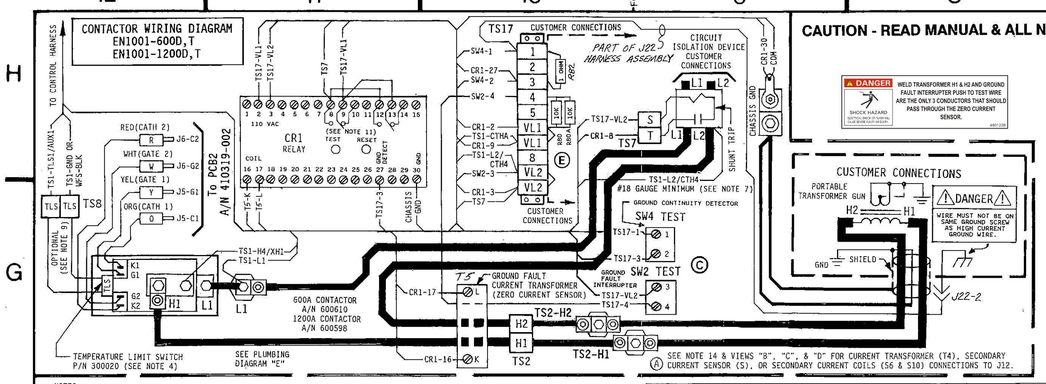

CAUTION - READ MANUAL & ALL NOTES BEFORE INSTALLING OR OPERATING CONTROL, SEE NOTE 1.

DANGER — WELD TRANSFORMER H1 & H2 AND GROUND FAULT INTERRUPTER PUSH TO TEST WIRE ARE THE ONLY 3 CONDUCTORS THAT SHOULD PASS THROUGH THE ZERO CURRENT SENSOR. SHOCK HAZARD. DISTRIBUTION TRANSFORMER CLASS 2 OR SELV CIRCUIT REQUIRED. 4007226

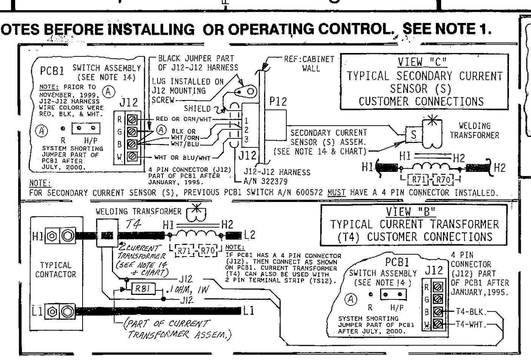

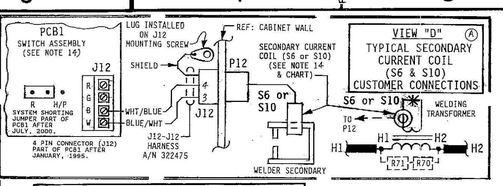

CAUTION
Control Shipped Wired for 460 VAC
Unless otherwise specified - See Note 2.

QTY.	DESIG.	PART NO.	DESCRIPTION
1		600574-004	Assem., Dial Plate, w/Sw. Assem., EN1001, Consisting of:
@		600574-005	Assem., Dial Plate, w/Sw. Assem. & Keylock, EN1001, Consisting of:
1	PCB1	600572-002	Assem., Switch, Sequence Control & Display Board
@	SW1	600531-001	Assem., Switch, Keylock, Momentary, SPST
1		540245	Illustrated Panel, Dial Plate, EN1001
1		515104	Panel, Display Window, Red Filter, EN1001
1		565003	Hole Plug, 3/4" Diam., Black
1	PWR.LT.	305001	Lamp, Neon, Red, 230V
1	WLD.LT.	305002	Lamp, Neon, Clear, 230V
1	J2-J2	322326	Assem., Harness, Seq. Ctrl Bd. to Terminal Strip Bd.
1	J3	322334-007	Assem., Harness, Power, EN1001/GF, "D/T" Cabinet
1	J4-J4	322397	Assem., Harness, Seq. Ctrl Bd. to RS485 Driver Bd.
1	J485-J485-J485	322369-011	Assem., Harness, RS485 Driver Bd. to Cabinet connector

PARTS LIST - CONTROL SECTION — **421377 - 001 E**

EN1001-1200D,T	EN1001-600D,T	QUANTITY	DESIG.	PART NO.	DESCRIPTION
		2	TS1,17	335034	Terminal Strip, 10 Pin, (Part of J3 Harness)
		1	TS7	335044	Terminal Strip, 2 Pin
		+	TS8	335017	Terminal Strip, 2 Pin, (For TLS/WFS)
		1	T1	310001	Transformer, Control, (Part of J3 Harness)
		1	T2	310002	Transformer, Sense, (Part of J3 Harness)
		1	T3	311011	Transformer, Valve, 150VA, 24V
		2	R70,71	225016	Resistor, Power, Surge, 500 Ohm, 100W
(E)		2	R80,R80A	600645	Assem., Resistor, 10,000 Ohm, 1W, (For TS17)
		1	R81	210198	Resistor, Metal Oxide, .1 Ohm, 1W,(Part of Current Transformer)
		1	R82	600646	Assem., Resistor, 1 Ohm, 1W, (For TS17)
(A)		1	F1	308010	Fuseholder, 1 Pole, Mini, 600V
		1	F1	300016	Fuse, Control, 1/4A, FNQ-R-1/4 or KLDR-1/4
		3	F6,7,8(PCB2)	307022	Fuse, 1 Amp, Slow Blow, 2AG, (Part of 410319 & 410319-002)
		1	(R70,71)	325024	Assem., Wire, Surge Resistor, 18 Ga., Black
		2	(T3)	325149	Assem., Wire, Valve Transformer, 22 Ga., Black
		1		600610	Assem., Contactor, Thyristor, Water, 600A, 460/575V .
		1		346004	Lug, Screw, 5/16 Bolt to 2/0 Wire, 600A Thyristor Contactor, H1
		1		346011	Lug, Screw, 1/4 Bolt to 2/0 Wire, 600A Thyristor Contactor, L1
		1		341040	Standoff, Insulator, 600/1200A Thyristor Contactor, L1
		1		325174	Assem., Wire, Contactor-L1 to Lug-L1, 600/1200A Thy. Contactor
		1		600598	Assem., Contactor, Thyristor, Water, 1200A, 460/575V
		2		346002	Lug, Screw, 5/16 Bolt to 250 MCM Wire, 1200A Contactor, L1 & H1
		1	(TS2)	600649	Assem., Standoff, w/Insulator, TS2-H1, Consisting of:
				341045	Insulator, Insulation between H1 & H2 Lugs, TS2-H1
				341040-001	Standoff, Modified for Insulator, TS2-H1
		4	(TS2)	346002	Lug,Screw,5/16 Bolt to 250 MCM Wire,1200A Cont.,TS2-H1 & TS2-H2
		1	(TS2)	341040	Standoff, Insulator, TS2-H2
		4	(TS2)	346011	Lug, Screw, 1/4 Bolt to 2/0 Wire, 600A Cont., TS2-H1 & TS2-H2
		1	J22	322196-021	Assem., Harness, TGA Gun, Type "S"
(A)	#		S6	600647	ASSEM, SECONDARY CURRENT, 6" COIL ROGOWSKI
(A)	1	1	T5	309514	Ground Fault Current Transformer
(A)	1	1	CR1	600695	Relay, Residual Current & Ground Detection, supplied w/Manual
(A)	1	1	SW2	302024	Switch, Oiltight, Push Button, Red, N/O Contact 22 mm
(A)	1	1	SW4	302025	Switch, Oiltight, Push Button, Red, N/C Contact 22 mm
(A)	1	1	TLS	300020	Switch, Temperature Limit, (N.C.)
(A)	#		S10	600648	ASSEM, SECONDARY CURRENT, 10" COIL ROGOWSKI
	1	1		346004	Lug, Screw, Chassis GND, 2/0 Wire
	1	1	PCB5	410347	Assem., PCB, RS485 Driver Board
	X	1	PCB2	410319-002	Assem., PCB, Terminal Strip Board, EN1001
	1	1	(PCB2)	510236	Plate, Mounting, Terminal Strip Board
	1	1		530021	Plate, Mounting, 600/1200A Thyristor Contactor
		1		324371	Wire, 2/0, 600A Thyristor Contactor, TS2-H2 to C/B-L2, 30" Long
		1		324372	Wire, 2/0, 600A Thyristor Contactor, TS2-H1 to Cont-H1, 20" Long
		1		324365	Wire, 2/0, 600A Thyristor Contactor, C/B-L1 to Cont-L1, 16" Long
		1		324373	Wire,250 MCM,1200A Thyristor Contactor, TS2-H2 to C/B-L2,25" Lg.
	1	1		324374	Wire,250 MCM,1200A Thyristor Contactor, TS2-H1 to Cont-H1,18" Lg.
	1	1		324366	Wire,250 MCM,1200A Thyristor Contactor, C/B-L1 to Cont-L1,14" Lg.
	#			600590	Assem., Secondary Current Sensor (S)
	#	#	J12-J12	322379	Assem., Harness, Secondary Current Sensor
	#	#	T4	SEE CHART	Assem., Transformer, Current, 500:5, P5
	#	#	T4	SEE CHART	Assem., Transformer, Current, 1000:5, P10
	▼	▼	J485-J485	900258	Cable, Wire, 4 Conductor, 24 Ga., w/Shield, SHIPPED LOOSE
	▼	▼	J485-J485	331136	Connector, 9 Pin, Screw Terminal, "D" Style, SHIPPED LOOSE
(A)	#	#F	J12-J12	322475	ASSEM, HARNESS, SECONDARY CURRENT, ROGOWSKI COIL
	36"	36"		900045	Hose, 3/8" I.D.
	4	4		566010	Hose Clamp, 3/8" Hose
	2	2		600179	Assem., Water Fitting, 3/8" Hose
	+	+	WFS	600297	Assem., Water Flow Switch, 3/8" Hose
	1	1		550014	Vault Closing Door Mechanism, "D/T" Cabinet
	1	1		510247-002	Cabinet, Control, Style "D/T", w/CB, Modified for GF
	1	1		510248	Door, Cabinet, Control, Style "D/T"
	1	1	C/B		Circuit Breaker, Pole, Amp, V, w/110 VAC Shunt Trip
	1	1		421407	Wiring Diagram, Interconnect Wiring of RS485 Driver Boards
	1	1		700173	Application Note, Customer Assembled J485-J485 Cable Assembly
	1	1		700171	Application Note, RS485 Driver Board
	1	1		700120	Manual, EN1001
	1	1		421271	Logic Diagram, EN1001 Control
(D)	1	1		421377-001	Wiring Diagram, EN1001/(TG)A) -600/-1200/GF/485, "D/T" Cabinet

PARTS LIST - CONTACTOR SECTION

▼ Customer to assemble J485-J485 Cable Assembly per Application Note 700173. ENTRON to supply 25 Feet (25') of Cable P/N 900258, two (2) Connectors P/N 331136, & two (2) "J485" Labels P/N 460228 one (1) for each Connector (SHIPPED LOOSE).
@ Optional Keylock when specified by customer. See Note 8. Pack Key in Poly Bag 900148 & attach to Door w/Yellow Tape 900118.
(A) # Supply either quantity one (1) Current Transformer (T4), one (1) Secondary Current Sensor (S), or one (1) Secondary Current Coil (S6 & S10). See Current Sensing Coil/Sensor Application Chart for Part Number.
+ Optional Water Flow Switch Assembly & TS8. An additional Thirty-Six inches (36") of hose, P/N 900045 and two (2) hose clamps, P/N 566010 are to be supplied. See Note 9.
X Optional. When customer specifies that control be shipped without an "S" Connector. Substitute PCB2 A/N 410319 for A/N 410319-002. See Note 16.

MANUFACTURING INSTRUCTIONS:
See Drawing #600562 for Mechanical Layout/Assem. of EN1001 "D/T" Cabinet.
See Drawing #440366 for Inner Pack & use Carton #650016 for "D/T" Cabinet Packing Instructions
See Drawing #440437 for Circuit Breaker to L1 Contactor Cable connections.
See Drawing #600526 for Layout/Assem. of Front Panel.
See Drawing #440457 for Current Transformer Assembly
See Drawing #440458 for Secondary Current Sensor Assembly.

NOTES:

1. It is recommended that control wiring (i.e.: initiation, pressure switch, etc.) be physically separated from the high voltage wiring (115 volts or higher).
2. For 460 VAC Operation - Use Jumper #1 on T3 & TS1. As shipped unless otherwise specified.
   For 230 VAC Operation - Use Jumper #2 on T3 & TS1.
   For 380 VAC Operation - CONSULT FACTORY.
   For 575 VAC Operation - CONSULT FACTORY.
3. Type "S" (J22): DO NOT CONNECT GUN GND TO CONTROL GND (TS1-GND)! Control Factory wired for GND Loss Protection. Loss of Gun Earth GND will prevent Control initiation. Gun Internal connections must be modified for correct operation of Ground Loss Protection Circuitry. The wire that connects the Thermic Energy Coil to P22-2 should be disconnected from Terminal Strip 1b Gun and insulated. This same Terminal Strip connection should then be grounded to the case of the gun at some point on the gun that no other wires share. For customer connections to Type "S" connector, see J22 Harness wiring configuration.
4. EN1001-SERIES "D/T" Cabinet:
   ENTRON supplies Temperature Limit Switch (TLS) P/N 300020 and provides connections to TS1-TLS1/AUX1 & TS1-GND. Jumper not required between TS1-TLS1/AUX1 & TS1-GND.
   NOTE: TLS Thyristor will open at temperatures greater than or equal to 150°F.
5. When external valve power is supplied to the control. Remove and insulate leads TS3-VL1 & TS3-VL2 on the Terminal Strip Board (PCB2), (from T3-X1 & T3-X2). Connect external AC power supply (24-240 VAC) to TS1-VL1 & TS1-SV2/SV4/VL2.
   CAUTION: Do not overtighten TS3.
6. Valve Usage:
   When using this control with air over oil Portable Transformer Guns with Extend and Intensify and/or Blocking valves the following valve assignments and jumper placement must be followed:
   TS1-SV1 & TS1-SV2 connects to Extend solenoid valve.
   TS1-SV3 & TS1-SV4 connects to Intensify solenoid valve.
   TS1-SV5 & TS1-SV6 connects to Blocking solenoid valve (when used).
   NOTE: TS1-SV5 & TS1-TS6 can be used for a valve output or a Process Output (Blocking Valve). When using TS1-SV5 & TS1-SV6 as a valve output use jumper "A" on TS3. When using TS1-SV5 & TS1-SV6 as a Process Output (Blocking Valve) use jumper "B" on TS3.
   CAUTION: Do not overtighten TS3
   WARNING: Use of Jumper "B" bypasses control relay contacts to allow a Process Output without an initiation. SEE MANUAL.
7. TS1-L2/CTH4 to Circuit Breaker L2 is Factory installed.
8. When Optional Program Lockout is specified by customer. Dial Plate A/N 600574-005 replaces A/N 600574-004, Add Switch P/N 600531-001 & remove Hole Plug P/N 565003.
9. When TLS and WFS are used together, add WFS P/N 600297 & Terminal Strip TS8 P/N 335017. Wire as shown below. Jumper not required between TS1-TLS1/AUX1 & TS1-GND. WFS will open with flows less than .75 GPM.

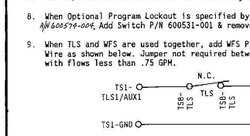

10. BEAT DURING SQUEEZE - If this is required, set Extended Function bE to 01 to engage BEAT DURING SQUEEZE function. Control will then function in BEAT DURING SQUEEZE mode. See manual for more information.
    NON BEAT DURING SQUEEZE - If this is required, set Extended Function bE to 00 to disengage preprogrammed BEAT DURING SQUEEZE function. Control will then function in NON BEAT DURING SQUEEZE mode. See manual for more information.
11. GROUND FAULT INTERRUPTER:
    This control is equipped with a ground fault and Ground Continuity operator protection system.
    (S) For proper operation and operator protection, the following MUST be considered:
    H1 & H2 Weld Transformer primary connections and push to TEST (SW2) lead are the ONLY 3 conductors that should pass through the Ground Fault Current Transformer (T5). The H1 & H2 wires should also be in close proximity to each other. Never pass a neutral or ground or shield or any other conductor other than the 3 wires listed above through the Ground Fault Current Transformer (T5).
    The ground fault interrupter TEST switch button (SW2) and Ground Continuity Switch Button (SW4), (push to test) should be used periodically to test the ground fault detection components. The TEST button on the Current Relay (CR1) need not be used.
    (E) Relay (CR1) MUST have S3, S4, & S8 (located behind CR1 Front Plate) closed IN PART ASSEM IN ACTIVE MODE. S3,S4, & S8 ARE ALSO CLOSED BY SYSTEM AT FACTORY.
    TS17-1 MUST be connected to Gun Case (GND) at a point mechanically different from the High Current Protection Ground. See view below.

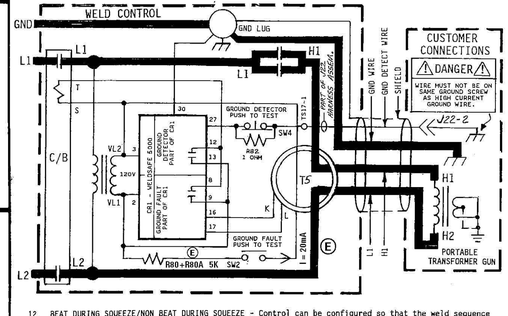

12. BEAT DURING SQUEEZE/NON BEAT DURING SQUEEZE - Control can be configured so that the weld sequence can be terminated before the end of the Squeeze Time by opening the initiation contacts.
    BEAT DURING SQUEEZE - If this is required, use Extended Function bE and set to 01. To remove beat during squeeze set Extended Function bE to 00. See manual for more information.
13. To Convert Control Panel from side mounted cabinet control to door mounted or door mounted cabinet control to side mounted.
    Remove Cover Plate and Control Panel Dial Plate Assembly. Position spiral wrap around all harness wiring to prevent interference of wiring with the closing of cabinet door.
    When mounting Control Panel on side of cabinet, use clamp to secure J3 harness wires.
    CAUTION: When changing the position of the Control Panel, be sure harness wires do NOT interfere with the closing of the cabinet door. Wires may pinch in between door & cabinet and cause damage to wiring.
(A) 14. CURRENT TRANSFORMER (T4) CONNECTIONS:
    Wire per view "B". Current Transformer coil (T4) shown installed on H1. do NOT install on L1. Install Current Transformer (T4) between TS2-H1 and Portable Transformer Gun H1. Wires from Current Transformer (T4) to J12 should be kept as short as possible.
    SECONDARY CURRENT SENSOR (S) CONNECTIONS:
    Wire per view "C". Secondary Current Sensor (S) may be used in place of Current Transformer (T4). Add J12-J12 Harness A/N 322379.
    SECONDARY CURRENT COILS (S6 & S10) CONNECTIONS:
    Wire per view "D". Secondary Current Coils (S6) & (S10) may be used in place of Current Transformer (T4). Add J12-J12 Harness A/N 322475.
    NOTE: Secondary Current Coils (S6) & (S10) can ONLY be used with PCB1 A/N 600572-002 at revision "Z" or any revision there after.
    AFTER JULY, 2000:
    Sequence Control/Display Board A/N 600572-002 (PCB1) revision "Z" or any revision there after MUST have the System Shorting Jumper installed into the correct two (2) pins for usage with either a Current Transformer (T4), Secondary Current Sensor (S), or Secondary Current Coils (S6 & S10). See applicable view "B", "C", or "D" for correct Jumper installation.
15. DIP Switch settings for positions 1 thru 4 on RS485 Driver Board (PCB5) are set at the factory to default as a last location RS485 in an interconnect wiring arrangement. See DIP Switch Settings Chart to change the settings when this RS485 is used as a middle location. J485-J485 Cable Assembly can be used to interconnect to either an RT4 Control, another ENTRON Welding Control, or a NON-ENTRON device that has a RS485 interface Board. See Wiring Diagram #421407 for Interconnect Wiring of RS485 Driver Boards.
16. For controls that are manufactured without an "S" connector. Substitute A/N 410319 for Terminal Strip Board (PCB2). Jumpers are used on A/N 410319 between TS1-PS1 & TS1-GND and also TS1-ES1 & TS1-GND as shown with dashed lines.
    NOTE: If wire connections are made in the field by customer to TS1-PS1 and/or TS1-ES1. Jumper(s) between TS1-PS1 & TS1-GND and/or TS1-ES1 & TS1-GND must be removed from the respective connection which is being used. SEE NOTE 3 ALSO.

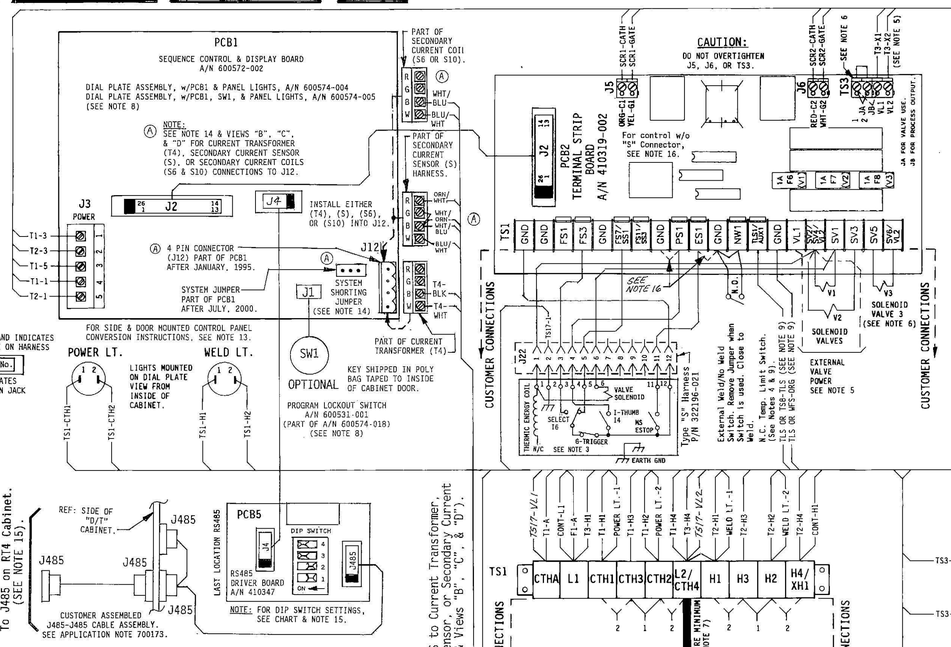

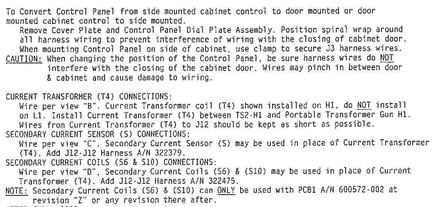

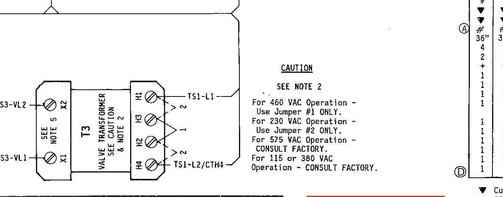

COIL/SENSOR MODEL NUMBER	CURRENT TRANSFORMER, SECONDARY CURRENT SENSOR, OR SECONDARY CURRENT COIL PART NUMBER	CONTACTOR SIZE 300A XTOR
P5 - 500:5	A/N 600576-004	X
P10 - 1000:5	A/N 600577-004	X
S	A/N 600590 & A/N 322379	X
(A) S6	A/N 600667 & A/N 322475	X
(A) S10	A/N 600668 & A/N 322475	X

X = ONE (1) CURRENT TRANSFORMER ASSEMBLY, ONE (1) SECONDARY CURRENT SENSOR ASSEMBLY, OR ONE (1) SECONDARY CURRENT COIL.

CURRENT SENSING COIL/SENSOR APPLICATION CHART

		LOCATION OF EACH ENTRON RS485 DRIVER BOARD IN AN INTERCONNECT ARRANGEMENT		
		1st RS485 IN INTERCONNECT ARRANGEMENT (Qty. One of RS485)	MIDDLE RS485 IN INTERCONNECT ARRANGEMENT (Qty. of RS485 may vary)	LAST RS485 IN INTERCONNECT ARRANGEMENT (Qty. One of RS485)
DIP SWITCH POSITION	POSITION 4	ON	OFF	ON
	POSITION 3	OFF	OFF	ON
FOR ON/OFF SETTING	POSITION 2	ON	OFF	OFF
	POSITION 1	ON	OFF	OFF

ENTRON RS485 DRIVER BOARD DIP SWITCH SETTINGS CHART

DANGER
HAZARDOUS VOLTAGE
HAZARDOUS VOLTAGE SOURCES MORE OR MORE SOURCES
Turn off all voltage sources before touching any components.
Electrical shock or flash will cause severe injury or death.
Do not remove or cover this sign. 4001669

NOTICE
This weld control complies with the RWMA bulletin 5.015.68.04 for use with a hand-held transgun.
Proper installation and maintenance must be followed for hand-held transgun operation.
See instructions.
Do not remove or cover this sign. 4002041

DANGER
HAZARDOUS VOLTAGE
Proper installation and maintenance must be followed for handheld transgun operation. Control must be installed with a primary power cable from control to transgun that is labeled to comply with RWMA Bulletin 5.015.68.04 for operator protection.
Electrical shock will cause severe injury or death.
Do not remove or cover this sign. 4002043

DANGER
HAZARDOUS VOLTAGE
DO NOT DEFEAT OR REMOVE PROTECTION CIRCUITRY.
Do Not Defeat or Remove Items Such as Ground Fault or Earth Leakage or Operate Without Shunt Trip Breaker.
Electrical shock will cause severe injury or death.
Do not remove or cover this sign. 4002038

DANGER
SHOCK HAZARD
TEST OPERATOR PROTECTION BEFORE USE.
ELECTRICAL SHOCK OR FLASH WILL CAUSE SEVERE INJURY OR DEATH.
Do not remove or cover this sign. 4001668

DANGER
HAZARDOUS VOLTAGE
Electrical shock will cause severe injury or death.
PE Connect this terminal directly to earth ground.
Do not remove or cover this sign. 4001662

NOTICE
FOR SERVICE ON THIS CONTROL
Contact Your Machine Dealer Or
ENTRON CONTROLS LLC.
DIRECTLY: (864) 416-0190
601 HIGH TECH COURT
GREER, SC 29650
FAX# (864) 416-0195
4002023

CAUTION
WATER HOSE BURST HAZARD
Cooling water must be flowing when power is on.
Water hose can burst and damage controls.
Do not remove or cover this sign. 4001658

PLUMBING DIAGRAMS
SEE PARTS LIST FOR HOSE LENGTH
PLUMBING DIAGRAM "E" 600A & 1200A CONTACTORS
WFS OUT IN
ROUTING WITH WFS

NO CIRCUIT CALIBRATION OR ADJUSTMENT EVER REQUIRED.

REV.	AUTH.	DESCRIPTION	DRAWN BY DATE	CHK'D BY DATE
B		ECN 2713 For 600A & 1200A XTOR Contacts w/ PCB: CR1 600695 WAS 309514; IN DRAW: UPDATED NOTE 11 "GND FAULT INTERRUPTOR..."	DEC 7-10-02	DEC 7-10-02
A		ECN 2617 IN DRAW & P/L: FUSE F1 PART NO. 307024, FKQ-R-1/4 WAS 307018, 6/10A, TYPE BBS 6/10A; IN DRAW: ADDED REF NOTE "PRIOR TO 10-1-00, FUSE F1 WAS P/N 307018, 6/10A, TYPE BBS 6/10." FOR 600A & 1200A XTORS IN P/L: ADDED SS GASKET KIT 600668, & J12-J12 HARNESS 322475; IN DRAW: ADDED VIEW "D" & SS/S10 CONNECTIONS TO J12. UPDATED NOTE 14, 15, & 16 & SS/S10 CONNECTIONS. & SENSORS COIL APPLICATION CHART; IN STOP W/O: UPDATED REF NOTE "SEE NOTE 14 & VIEWS "B", "C", & "D" FOR CURRENT TRANSFORMER (T4), SECONDARY CURRENT SENSOR (S), OR SECONDARY CURRENT COILS (S6 & S10) CONNECTIONS TO J12." "E1" & "E2" ADDED SYSTEM SHORTING JUMPER; ADDED SYSTEM SHORTING JUMPER.	DEC 9-7-01	DEC 9-7-01
—	—	ECN 2588 IN DRAW: CHG'D SEC CURR SENSOR (S) WIRE COLORS; IN VIEW: CHG'D SEC CURR SENSOR (S) WIRE COLORS & ADDED NOTE "PRIOR TO NOVEMBER, 1999...."		
—	—	ORIGINAL RELEASE		

REV	AUTH	DESCRIPTION	DRAWN BY DATE	CHK'D BY DATE
E	ECN 2940 / ECN 2928	REVISED GF TEST TO 20mA; ADDED RESISTOR R80A. / WELDSAFE 5000 (CR1) P/N 600695, SET SWITCH 8 TO CLOSED POSITION FOR 20mSEC RESPONSE TIME.	DCS 11/18/08 / DPDII 2/28/08	
D	ECN 2925	ADDED "TGA" TO TITLE, WAS "W/D.EN1001-1200/GF/485,"D/T"CAB., W/TYPE "S" CONN., 24 VAC VALVE TRANSFORMER & CIRCUIT BREAKER". UPDATE LABELS TO CURRENT REV.	DPDII 02/06/08	
C	ECN 2892	CHG'D SWITCH 2,4 WAS P/N 300016 NOW SW2 IS PN 302024 AND SW4 IS P/N 302025	21SI07 DPDII	
B				
A				

REV.	AUTH.	DESCRIPTION	DRAWN BY DATE	CHK'D BY DATE
		EN1001-600D,T/GF/485	EN1001-1200D,T/GF/485	

SCALE	DATE	DRAWN BY	CHK'D BY	APPROVED BY
N/A	12-6-99	DEC	DEC 12-6-99	

TOLERANCE UNLESS SPECIFIED
ANGLES: ± 1/2°
DECIMALS: ± .010
FRACT