CAUTION - READ MANUAL & ALL NOTES BEFORE INSTALLING OR OPERATING CONTROL. SEE NOTE 1

DANGER

HAZARDOUS VOLTAGE FROM ONE OR MORE SOURCES

Turn off all voltage sources before touching any components. Electrical shock or flash will cause severe injury or death.

Do not remove or cover this sign 4601428

CAUTION

WATER HOSE BURST HAZARD

Cooling water must be flowing when power is on. Water hose can burst and damage controls.

Do not remove or cover this sign. 4601458

CAUTION
Control Shipped Wired for 460 VAC
Unless otherwise specified - See Note 2

TYPICAL CONNECTION FOR CUSTOMER SUPPLIED CONTACTORS

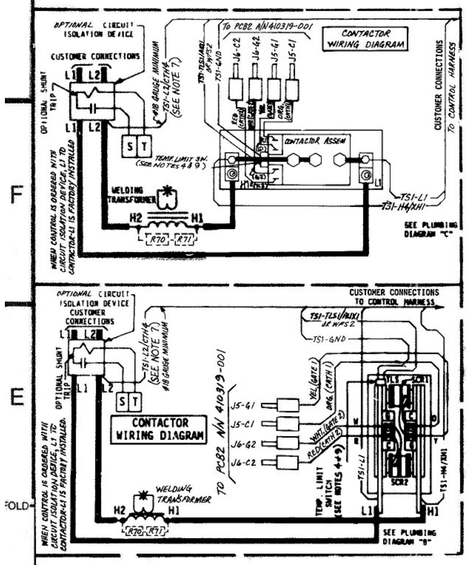

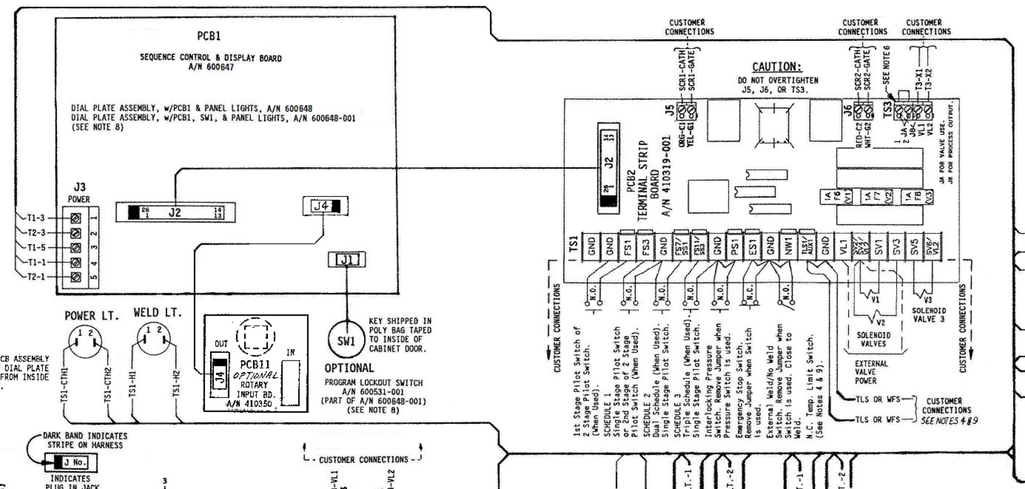

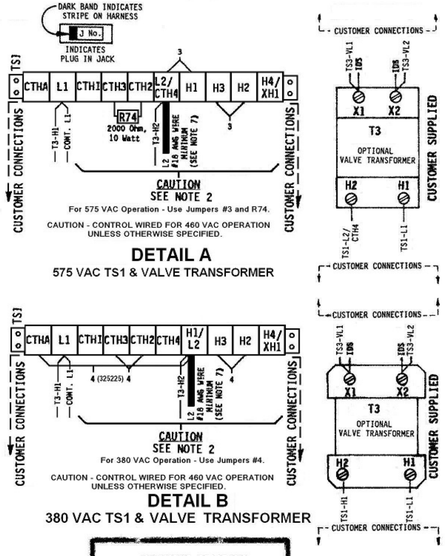

NOTES:

1. It is recommended that Control Wiring (i.e.: initiation, pressure switch, etc.) be physically separated from the high voltage wiring (115 volts or higher).
2. For 460 VAC Operation - Use Jumper #1 on T3 & TS1. As shipped unless otherwise specified.
   For 230 VAC Operation - Use Jumper #2 on T3 & TS1.
   For 575 VAC Operation - Use Jumpers #3 and 2000 Ohm, 10 Watt R74 on TS1. See Detail A for 575 VAC TS1 And for 575 VAC Customer supplied Valve Transformer.
   For 380 VAC Operation - Use Jumpers #4 on TS1. See DETAIL B for 380 VAC TS1 and for 380 VAC Customer Supplied Valve Transformer.
   For 115 VAC Operation - CONSULT FACTORY.
3. For Single Stage Pilot Operation - Connect pilot switch to TS1-FS3 & TS1-GND. No Jumpers required across TS1-FS1 & TS1-GND.

   For Two Stage Pilot Operation - Connect 1st stage pilot switch to TS1-FS1 & TS1-GND. Connect 2nd stage pilot switch to TS1-FS3 & TS1-GND.

   For DUAL COUNT/DUAL CURRENT (Dual Weld/Dual Heat) or TRIPLE COUNT/TRIPLE CURRENT (Triple weld/Triple Heat) or External Schedule Selection, SEE MANUAL.
4. It is recommended that a Temperature Limit Switch (TLS) similar to ENTRON P/N 300020 be provided and connected to TS1-TLS1/AUX1 & TS1-GND. Jumper not required between TS1-TLS1/AUX1 & TS1-GND. NOTE: TLS should open at Temperatures greater than or equal to 150°.
6. VALVE 3 OUTPUT USAGE:
   TS1-SV5 & TS1-SV6 (Valve 3) can be used for either a Valve output or a Process output.
   When TS1-SV5 & TS1-SV6 is used as a Valve output use Jumper "A" on TS3.
   When TS1-SV5 & TS1-SV6 is used as a Process output use Jumper "B" on TS3.
   CAUTION: Do Not overtighten TS3.

   WARNING: Use of Jumper "B" bypasses control relay contacts to allow a process output Without an initiation. SEE MANUAL.
7. Connect TS1-L2/CTH4 to L2/H2 side of Welding Transformer primary.
8. **When Optional Program Lockout is specified by customer. Dial Plate A/N 600648-001 replaces A/N 600648. Add Switch P/N 600531-001 & remove Hole Plug P/N 565003.**
9. When TLS and WFS are used together, wire as shown below. Jumper not required between TS1-TLS1/AUX1 & TS1-GND. WFS should open with flows less than .75 GPM.

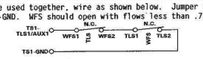

PLUMBING DIAGRAMS

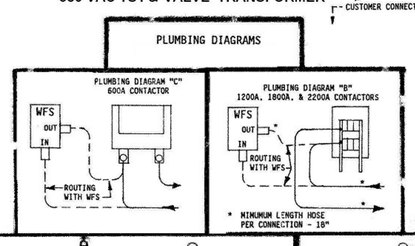

NOTICE

FOR SERVICE ON THIS CONTROL
Contact Your Machine Dealer Or
ENTRON CONTROLS LLC.
DIRECTLY: (864) 416-0190
601 HIGH TECH COURT
GREER, SC 29650
FAX# (864) 416-0195

NO CIRCUIT CALIBRATION OR ADJUSTMENT EVER REQUIRED.

11 X 11 FLAT PLATE CONTROL MOUNTING DRAWING

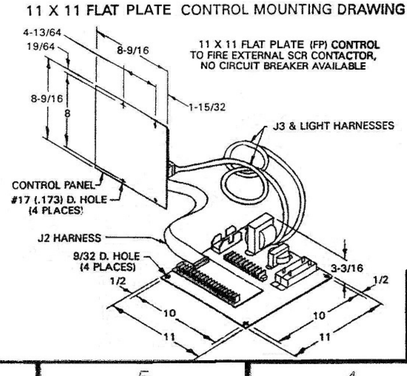

REV	AUTH	DESCRIPTION	DRWN BY DATE	CHK'D BY DATE
—	—	ORIGINAL RELEASE		

ENTRON

SCALE	DATE	DRAWN BY	CHK'D BY	APPROVED BY
≈	8/22/13	DCS		

TOLERANCE UNLESS SPECIFIED
ANGLES: ± ½°
DECIMALS: ± .010
FRACTIONS: ± 1/64

REVISED	
REV LTR	APPROVED BY
DATE	

WIRING DIAGRAM, EN1380-FP(SCR), 11 X 11 FLAT PLATE
WIRED for SELECTABLE 230/380/460/575 VAC OPERATION

NEXT ASSM/USED ON | DRAWING NUMBER 421522 | REV orig

PARTS LIST - CONTROL SECTION 421522 orig

QTY.	DESIG.	PART NO.	DESCRIPTION
1		600648	Assem,Dial Plate,w/Sw.Assem.,EN1380, Consisting of:
0		600648-001	Assem., Dial Plate, w/Sw. Assem. & Keylock, EN1380, Consisting of:
1	PCB1	600647	Assem., Switch, Sequence Control & Display Board
0	SW1	600531-001	Assem., Switch, Keylock, Momentary, SPST
1		540293	Illustrated Panel, Dial Plate, EN1380
1		515104	Panel, Display Window, Red Filter. EN1380
1		565003	Hole Plug, 3/4" Diam., Black
1		565013	Hole Plug, 3/8" Diam., Black (for Rotary Bd. Hole)
X	PCB11	410350	Optional Assem., PCB, Rotary Input Board
X		319008	Knob, Skirted, w/o Indicator, Black
X	J4-J4	322447	Assem., Harness, Ctrl Bd. to Rotary Input Bd., 7" lg.
1	J2-J2	322437	Assem., Harness, Ctrl Bd. to Term. Bd.
1	J3	322438	Assem., Harness, Power, EN1380-FP(SCR)
1	PWR.LT.	305001	Lamp, Neon, Red, 230V
1	WLD.LT.	305002	Lamp, Neon, Clear, 230V

EN1380-FP(SCR)

PARTS LIST - CONTACTOR SECTION

QTY	DESIG.	PART NO.	DESCRIPTION
1	TS1	335067	Terminal Strip, 10 Pin, (Part of J3 Harness)
1	T1	310001	Transformer, Control, (Part of J3 Harness)
1	T2	310002	Transformer, Sense, (Part of J3 Harness)
2	R70,71	225016	Resistor, Power, Surge, 500 Ohm, 100W
1	F1	308010	Fuseholder, 1 Pole, Mini, 600V
1	F1	307024	Fuse, Control, 1/4A, FNQ-R-1/4 or KLDR-1/4
3	F6,7,8(PCB2)	307022	Fuse, 1 Amp, Slow Blow, 2AG, (Part of 410319-001)
1	(R70,71)	325024	Assem., Wire, Surge Resistor, 16 Ga., Black
1	PCB2	410319-001	Assem., PCB, Terminal Strip Board, EN1380
1		510245	Assem. 11 x 11 Flat Plate, EN1380-FP(SCR)
1		440450-001	Mounting Detail. 11 x 11 Flat Plate
1		700163	Manual, EN1380
1		421383	Logic Diagram, EN1380-Series Controls
1		421522	Wiring Diagram, EN1380-FP(SCR) Cabinet

0 Optional Keylock when specified by customer. See Note 8. Pack Key in Poly Bag 900148 & attach to Door w/Yellow Tape 900118.

X Optional. Add quantity one (1) PCB11 Rotary Input Board when specified by customer. Remove Hole Plug P/N 565013 when PCB11 is specified. Supply quantity one (1) each of J4-J4 Harness Assembly and Knob when optional PCB11 is specified.

See Drawing #440450-001 for mounting detail of Flat Plate (FP).

Tape one (1) Poly Bag P/N 900148 to Flat Panel using Tape P/N 900118 & include the Following in the bag:

4 Ea. 6-32 x 1/4 PHSMS, Phil, Black	557004
4 Ea. 6-32 x 1/4 PHSMS, Phil, Brite	557003
4 Ea. 6-32 x 1/4 A/F Hex Nut	557018
4 Ea. 6-32 x ⅛ Standoffs	555031
1 Ea. Label, Danger, Hazardous Voltage...	460142/RAMA156103C
1 Ea. Label, Danger, Voltage and Flash Hazard...	460143/RAMA156103A
1 Ea. Label, Voltage Hazard...Earth Gnd...	460144/RAMA156103D
1 Ea. Label, Caution, Water Hose Burst Hazard...	460145/RAMA156103E
1 Ea. Label, Warning, Hazardous Voltage...	460146/RAMA156103B
1 Ea. Label, Caution, Do not Pinch Wires...	460170
1 Ea. Resistor, Power, 2000 Ohm, 10W (for 575 VAC)	600048
1 Ea. Jumper, TS1, (for 380 VAC)	325225

When Control is wired for either 230/460/575 VAC Operation, add quantity one (1) TS1 Label P/N 460201 for 380 VAC Operation.
When Control is wired for 380 VAC Operation, add quantity one (1) TS1 Label 460105 for 230/460/575 VAC Operation.

MANUFACTURING INSTRUCTIONS:
See Drawing #600526 for Layout/Assembly of Front Panel.
See Drawing 600554 for Mechanical Assembly Instructions.
See Drawing 440454 for Packing Instructions.

DRAWING NUMBER 421522 REV orig

22x34